TP-7580E

HYBRID LOCOMOTIVE CONCEPTUAL DESIGN

Library and Information Centre / Centre de documentation (GSLA)
RECEIVED / REÇU LE
JUL 29 1986
Transport Canada

Prepared for

TRANSPORTATION DEVELOPMENT CENTRE
TRANSPORT CANADA
MONTREAL, CANADA

by H. Dorosh
BOMBARDIER INC.
RAIL AND DIESEL PRODUCTS DIVISION
MONTREAL, QUEBEC, CANADA

April 1986

The contents of this report reflect the views of the contractor and not necessarily the official views or policies of the Transportation Development Centre, Transport Canada.

Un sommaire en français est inclus avant la table des matières.

PROJECT TEAM

The project team for Bombardier Inc. was composed of the following people:

H. DOROSH

S. HALL

R. DUBUC

Contributor for Electrak Canada was:

R. AVERY

REPORT DOCUMENTATION FORM

1. Transport Canada Report No. TP 7580E	2. TDC Project No 6134	3. Recipient's Catalogue No.
4. Title and Subtitle HYBRID LOCOMOTIVE CONCEPTUAL DESIGN		5. Report Date April 1986 6. Performing Organization Report No. 439200
7. Author(s) H. Dorosh		8. Transport Canada File No. D1465-429
9. Performing Organization Name and Address Bombardier Inc. Rail and Diesel Products Division 1505 Dickson Street Montreal, Quebec H1N 2H7		10. DSS File No. 11SD.T8200-3-3581 11. DSS or Transport Canada Contract No. OSD84-0020
12. Sponsoring Agency Name and Address Transportation Development Centre (TDC) 200 Dorchester Blvd. West Suite 601, West Tower Montreal, Quebec H2Z 1X4		13. Type of Report and Period Covered Aug. 1984-Mar. 1986 14. Sponsoring Agency Code 6134
15. Supplementary Notes		16. TDC Project Officer C. A. Versailles

17. Abstract

The objective of this study was to develop conceptual layouts for locomotives designed to operate from both on-board diesel engines and power obtained from overhead catenary or wayside third rail power sources.

The study examined potential hybrid locomotive appliations in North-America and grouped the applications into categories based on the required performance of the locomotives in the operating mode. Conceptual layouts for locomotives in each category were developed designed around railroad-type diesel engines.

18. Key Words Hybrid locomotives, traction power, DC traction system, 3-phase AC traction system, auxiliary locomotive systems, catenary/wayside power sources.	19. Distribution Statement Limited number of copies available on request from the Transportation Development Centre (TDC).

20. Security Classification (of this report)	21. Security Classification (of this page)	22. No of Pages	23. Price
Unclassified	Unclassified	37	nil

TDC CDT 79-005 formule française au verso

FORMULE DE DOCUMENTATION POUR RAPPORT

1 N° du rapport Transports Canada TP 7580 E	2 N° de l'étude — CDT 6134	3 N° de catalogue du destinataire
4 Titre et sous-titre Hybrid Locomotive Conceptual Design		5 Date du rapport avril 1986 6 N° du rapport de l'organisme exécutant 439200
7 Auteur(s) H. Dorosh		8 N° de dossier - Transports Canada D1465-429
9 Nom et adresse de l'organisme exécutant Bombardier Inc. Division des produits ferroviaires et diesel 1505 rue Dickson Montréal (Québec) H1N 2H7		10 N° de dossier — ASC 11SD.T8200-3-3581 11 N° de contrat — ASC ou Transports Canada OSD84-0020
12 Nom et adresse de l'organisme parrain Centre de développement des transports (CDT) 200 ouest boul. Dorchester Suite 601, tour ouest Montréal (Québec) H2Z 1X4		13 Genre de rapport et période visée août 1984-mars 1986 14 Code de l'organisme parrain 6134
15 Remarques additionnelles		16 Agent de projet — CDT C. A. Versailles

17 Résumé

L'objectif de cette étude est de développer des concepts de locomotives pouvant utiliser alternativement deux sources d'énergie: soit un moteur diesel ou une source électrique externe, par caténaire ou rail auxiliaire.

L'étude examine les applications potentielles de locomotive hybride en Amérique du nord et les regroupe en différentes catégories suivant les performances requises dans les deux modes d'opération. A partir de moteurs déjà utilisés dans les locomotives diesel, des arrangements conceptuels ont été développés pour chacune des catégories.

18 Mots-clés Locomotives hybrides, effort de traction moteur de traction, système de traction à courant continu, système de traction tri-phasé, organes de locomotives.	19 Diffusion Le CDT dispose d'un nombre limité d'exemplaires.

20 Classification de sécurité (de ce rapport) non classifié	21 Classification de sécurité (de cette page) non classifiée	22 Nombre de pages 37	23 Prix nil

CDT TDC 18 005

English on reverse

SUMMARY

This report describes work carried out by Bombardier Inc. in determining existing and potential North American applications for railroad hybrid locomotives and developing conceptual designs for locomotives to meet the performance requirements of these applications. For the purpose of this study, hybrid locomotives were considered to be locomotives containing a railroad-type diesel engine as well as electrical equipment capable of using wayside electric power. Wayside power is typically DC in the range of 600 to 750 V using a third rail distribution system or single-phase AC at 11,000 to 15,000 V at 25 or 60 Hz supplied from an overhead conductor.

It was found that the majority of hybrid locomotive applications could be grouped into four categories depending on the performance demanded in the diesel mode and the type and level of electric power required in the electric mode:

1) Medium power diesel/low power DC
2) Medium power diesel/medium power DC
3) Low power diesel/medium to high power AC
4) Medium power diesel/medium to high power AC

The first category represents a relatively minor addition of electrical equipment to an otherwise standard diesel-electric locomotive. Equipment requirements increase in the other categories and are maximum in the fourth category where high performance is demanded in both diesel and electric modes.

In general, either conventional DC or 3-phase AC traction can be used in all the application categories. Layouts for hybrid locomotives operating from 3rd rail DC were developed based on the use of 3-phase AC traction and auxiliary power systems. This was done for both conventional thyristor and projected freon-cooled GTO inverters. The latter are less sensitive to the level of the supply voltage and allow increased performance in the electric mode where the available system voltage would be less than in the diesel mode.

High performance in both diesel and electric modes from a diesel/high-voltage AC hybrid locomotive creates a major equipment installation problem. Layout work using DC traction indicates that a central cooling system could be used to cool both the diesel engine and electrical equipment. This ensures the feasibility of a hybrid locomotive with a 12 cylinder railroad-type engine on 6 axles. Further work would be required to establish the feasibility of a similar unit outfitted with a 16 cylinder engine.

SOMMAIRE

Ce rapport décrit le travail entrepris par Bombardier Inc. afin de déterminer les applications nord-américaines existantes et potentielles pour les locomotives hybrides de chemins de fer et de développer des dessins de conception de locomotives devant rencontrer les demandes de performances pour ces applications. Pour les besoins de cette étude, les locomotives hybrides furent considérées comme des locomotives contenant un moteur diesel du type chemin de fer, et un équipement électrique pouvant employer une source électrique externe. Le système d'electrification externe est typiquement CC dans l'échelle de 600 à 750 volts, utilisant un système de distribution par troisième rail ou à CA simple phase de 11,000 à 15,000 volts à 25 ou 60 Hz fournie par une catenaire.

Il a été établi que la majorité de ces applications de locomotives hybrides pouvaient être groupées en quatre catégories, dépendant de la performance demandée en mode diesel et du type et niveau de puissance électrique requis en mode électrique:

1) Puissance moyenne diesel/basse puissance CC
2) Puissance moyenne diesel/puissance moyenne CC
3) Basse puissance diesel/puissance moyenne à haute CA
4) Puissance moyenne diesel/puissance moyenne à haute CA

La première catégorie représente une addition relativement mineure d'équipement électrique à une locomotive diesel-électrique standard. Les exigences d'équipement augmentent dans les autres catégories et sont au maximum dans la quatrième catégorie où une haute performance est exigée dans les modes diesel et électrique.

En général, la traction conventionnelle CC ou la CA tri-phasée peuvent être employées dans toutes les catégories d'applications. Des concepts de locomotives hybrides opérant d'un rail auxiliaire CC furent développés basés sur l'utilisation de la traction CA tri-phasée. Ceci fut fait en utilisant des thyristors conventionnels et des GTO refroidis au fréon. Ces derniers sont moins sensibles au niveau de voltage CC et permettent une performance accrue en mode électrique où les niveaux de tension disponibles seraient moindres qu'en mode diesel.

La haute performance en modes électrique et diesel d'une locomotive diesel hybride à haut voltage AC crée un problème majeur pour l'installation de l'équipement. Un concept du travail employant la traction CC indique qu'un système de refroidissement central pourrait être employé pour refroidir le moteur diesel et l'équipement électrique. Ceci pourrait assurer la possibilité d'une locomotive hybride avec un moteur diesel à 12 cylindres du type chemin de fer sur 6 essieux. Un surplus de travail serait requis pour établir la practicabilité d'une unité similaire, équipée d'un moteur à 16 cylindres.

TABLE OF CONTENTS

		Page
1.	INTRODUCTION	
	1.1 Background	1
	1.2 Objectives and Methodology	2
2.	HYBRID LOCOMOTIVE APPLICATIONS	
	2.1 Mainline Freight Railroads	3
	2.2 Industrial Railroads	4
	2.3 Switching Railroads	5
	2.4 Commuter Railroads	5
	2.5 Intercity Passenger Trains	7
	2.6 Application Groups	7
3.	LOCOMOTIVE CONFIGURATIONS	
	3.1 Medium Power Diesel/Low Power DC	9
	3.2 Medium Power Diesel/Medium Power DC	9
	3.3 Low Power Diesel/High Power AC	17
	3.4 Medium Power Diesel/High Power AC	19
4.	CONCLUSIONS AND RECOMMENDATIONS	24
	REFERENCES	25

LIST OF FIGURES

Page

1. Block Diagram: Limited Performance Hybrid Locomotive for 3rd Rail Operation DC Traction 10

2. Block Digram: Electrical System Hybrid Diesel/3rd Rail Locomotive DC Traction 13

3. Block Diagram: Electrical System Hybrid Diesel/3rd Rail Locomotive 3 AC Traction 14

4. General Arrangement: Co-Co, Full-Width Hood, Single Cab, 3 AC, 3rd Rail, air-Cooled Inverters 15

5. General Arrangement: Bo-Bo, Full Width Hood, Single Cab "Euro", 3 AC, 3rd Rail, Air-Cooled Inverters 16

6. General Arrangement: Bo-Bo, Full-Width Hood, Single Cab "Euro", 3 AC, 3rd Rail, Freon-Cooled Inverters 18

7. General Arrangement: Co-Co, Electric/Diesel-Electric Loco, Single "CN" Cab, DC Motor 21

8. Block Diagram: Electrical System Hybrid Diesel/HV AC Locomotive, DC Traction 22

LIST OF TABLES

1. Application Groups for Hybrid Locomotives/Consists.. 8

2. Dimensions of Bombardier Type 251 Engines 19

1. INTRODUCTION

1.1 Background

A number of US and Canadian railroads have installed electrification systems and operate electric locomotives. This has been mandated by legal requirements (tunnel operation, for example) or resulted from operational benefits from this form of traction. Except for sporadic bursts of activity in the first half of this century there has been, however, no widespread electrification of railroads in the US and Canada. At the time of writing of this report fuel prices are low and falling, momentarily effectively eliminating one of the main advantages of electric train operation over that of diesel-hauled service.

Although fuel prices and, assumedly, the divergence between fuel and electric power costs is predicted to increase again, railroads will probably continue to abstain from wide-scale electrification projects because of the lack of reasonably rapid return on investment from electric locomotive operations. Electric locomotives would be confined only to the electrified trackage which will spread relatively slowly under normal budget constraints. This would be in sharp contrast to diesel-electric locomotive where units can freely circulate over practically all trackage.

Locomotives designed to operate both from an on-board diesel engine and from the electrification system can eliminate much of the flexibility disadvantage of the electric locomotive. They can, in fact, allow a railroad to electrify initially only the neuralgic points of the system and thereby realize the performance advantages of electric mode operation in these areas while allowing diesel-electric operation outside.

There are other potential application areas for hybrid locomotives on railroads already operating electrification systems or contemplating electrification to meet special conditions. A market exists for locomotive builders interested in supplying equipment to meet the needs of these users.

1.2 Objectives and Methodology

The primary objective of this study was to provide a minimum number of conceptual locomotive designs configured to meet the requirements of the majority of potential hybrid locomotive users.

The first step in realizing this objective was for a subcontractor, Electrak Canada, to carry out a survey of existing and potential hybrid locomotive users. The next step was to refine these applications into application groups based on power requirements in the electric and diesel-electric modes. Conceptual layouts were then carried out to obtain preliminary hybrid locomotive designs for each of the application groups.

2. HYBRID LOCOMOTIVE APPLICATIONS

2.1 Mainline Freight Railroads

The only mainline freight railroad in the US with a significant electrification in place is CONRAIL in the northeast area. Operations with electric freight locomotives have, however, been discontinued for a number of years.

In Canada, the BC Rail branch line to Tumbler Ridge has recently been constructed with a 50 kV 60 Hz electrification. Coal is transported in unit trains pulled by electric locomotives to a junction with an existing non-electrified line.

In general, interest in hybrid locomotives by mainline railroads centers on the possibility of the following operating benefits:

- continuity of operations
- higher throughput

Continuity of operations means that the same locomotive or locomotive consist must run without changing equipment throughout all the trackage on a specified division of the railroad. For a railroad considering electrification this would be especially important in realizing immediate benefits from electric locomotive operations on trackage undergoing a staged electrification over a long period of time. Also, if appropriate hybrid locomotives were available, sidings, yards, and branch lines would not require electrification, thereby reducing initial electrification outlays.

Higher throughput on a steeply graded section of railroad trackage can be realized by electrification and introduction of electric locomotive operations to raise average train speed. If the electric locomotives were to be restricted to this relatively short section of electrified territory then they are engaged in essentially a "helper" operation. This, however, can be more economically executed by a small fleet of diesel-electric helper units, as is now done on a number of railroads operating in the western USA and Canada.

A hybrid locomotive or consist can have a greatly extended operating area compared to the electric locomotive "helper". Individual hybrid locomotives would require, in this case, a capability of up to 6000 diesel-equivalent hp in order to significantly increase train speeds on the grade. This can be obtained totally from the electrification system (in which case the engine is idled or stopped) or a portion can be obtained from the working engine and the rest from the electrification system. The former method was adopted in an earlier study on retrofitting diesel-electric locomotives for electrified operation. (Ref. 1).

On steep grades (1.5% or more) adhesion considerations may dictate distribution of the available tractive effort over more axles. A hybrid locomotive consist would result whereby one or two diesel-electric locomotives would be semi-permanently tied to an electric locomotive or "slug" (cabless) unit. In electrified areas the electric unit would supply power to the diesel units on the grade either as the sole supplier or in conjunction with the diesel engines. In steeply-graded but non-electrified areas the diesel units would supply the motors of the electric unit in order to realize the adhesion advantage.

In the BC Rail operation there is some interest in extending operation of the electric locomotives into the non-electrified terminal yards. For this purpose a diesel engine of 500-1000 hp on board the locomotive would be desirable. An alternate would be battery storage since relatively little power and energy would be required.

2.2 Industrial Railroads

A number of industrial railroads in the USA and Canada have electrification in place and in daily use. The gamut of locomotives used extends from the low-powered, low-voltage electric locomotives used in above-ground ore transfer operations to high-powered, 25/50 kV AC units applied to dedicated coal service between mines and power plants. The Black Mesa and Lake Powell E60C locomotive is an example of the latter designed for 50 kV, 5100 hp.

Such electrified operations are invariably autonomous with little or no connection with other railroads or industrial operations.

The only incentive for obtaining hybrid locomotives would be extension of railroad operations to new trackage where electrification is not planned.

2.3 Switching Railroads

Switching railroads typically handle high volumes of freight on a few lines connecting large yards. While electrification would be of some interest to such railroads in reducing fuel consumption and, possibly, the number of locomotives used to pull heavy trains, the cost of electrifying yards and sidings and the safety risks involved effectively inhibit projects of this sort. The hybrid locomotive would offer switching railroads an alternative to wiring the yards and could, therefore revive interest in electrification.

A suitable hybrid locomotive for these applications would have an electric capability of approximately 1000-2000 hp since only low speeds are generally required. An on-board diesel engine of about 500 hp would be sufficient for switching operations. A potential application can be found at British Columbia Hydro Rail in Vancouver, Canada which operates 160 route-km of mainline and 130 km of sidings and yards.

2.4 Commuter Railroads

Commuter railroads typically transport large numbers of people during rush hour periods. Relatively frequent station stops lead to a requirement for high acceleration rates in order to realize a reasonable trip time and therefore result in high peak power draw. Supply from an electrification system is more suitable for this type of operation than diesel traction. For this reason and because of the noise and pollution of diesel engines in restricted center-city and underground areas electric traction, either in the form of multiple-unit (MU) trains or electric locomotives, has been extensively applied to commuter railways.

Outlying areas of commuter railways have longer station spacings and serve lower population densities. These areas are adequately served by diesel-electric locomotive-hauled trains.

Commuter railroads using both types of traction will either change locomotives or require passengers to change trains when travelling between center-city and outlying areas. The hybrid locomotive is therefore interesting to railways in order to allow through-travelling of their complete system with the same train.

Commuter railways typically require diesel locomotive power on the order of 3000-3500 hp to realize the necessary traction performance and satisfy head-end-power (HEP) requirements when operating on non-electrified track sections. The diesel-equivalent hp required of a hybrid locomotive when operating in the electric mode will normally be equal or greater than this depending on acceleration rates, speeds, and station spacings. The capabilities of the electrification system, traction motors, and power pick-up apparatus may act to limit the peak power drawn.

In some cases electric operation is needed only to move trains through limited areas where diesel operation is undesirable. This is the case, for example, with Metro-North where their present FL9 locomotives incorporate switchgear and third rail pick-up shoes in order to travel through the Grand Central Station underground tunnels in New York City. Metro-North is interested, however, in exploiting electric operations in the future to the limits of their system electrification. For this purpose hybrid locomotives will be required capable of 650 VDC third rail operations at power levels up to 4000 hp.

Transferring of passengers and motive power changing can also be reduced on New Jersey Transit operations into New York City if hybrid locomotives were available capable of running on 11 kV 25 Hz in Pennsylvania Station and its approaches. In some operations relatively low power is involved and battery operation may be viewed as an alternative. In other cases relatively high levels of both diesel and electric power are contemplated for long distance running such as on the line to Atlantic City.

Similarly the Maryland Department of Transportation is interested in diesel/high voltage AC locomotives for a commuter line around Baltimore with installed powers of 3000 hp and 7000 hp in diesel and electric operation respectively.

2.5 Intercity Passenger Trains

Canada and the USA each have a single national passenger railroad operating authority (VIA and Amtrak, respectively). These organizations operate trains over routes owned by private railroads and are, hence, limited to some extent in their operations and equipment which can be used.

VIA trains do not run on electrified trackage except for a short section of 3000 VDC catenary in the Mount Royal tunnel. An electric locomotive is used to pull rail diesel cars (RDCs) up the grade leading out of Montreal for trains taking the northern route to Quebec City.

Amtrak operates a Northeast Corridor service on 11 kV 25 Hz electrified trackage between Washington, DC and New Haven, Conn. The electric locomotives used are capable of 6000-7000 hp continuous power because of the high speeds involved.

Continuation of service to other major cities on non-electrified trackage (Boston, Mass; Richmond, Va.) requires change to diesel locomotives at present. The power requirements of the diesel units is on the order of 3000-3500 hp. Through-service by means of hybrid locomotives has been studied by AMTRAK as a means of making their operations more efficient.

2.6 Application Groups

Attention was focused in this study particularly on hybrid locomotives outfitted with railroad type heavy-duty diesel engines. Gas turbines, fast-running diesel engines, batteries, etc were not considered in generating the application groups. Since railroad-type engines would typically have between 6 and 16 cylinders for locomotive traction power capabilities in the range of 1200 to 3600 hp, the application groups were organized into a "low power" diesel group (6 or 8 cylinders) and a "medium power" diesel group (12 or 16 cylinders).

The electrical equipment required depends on the type of power available (DC or high-voltage AC) and power level anticipated.

Applications requiring less than approximately 1000 hp were considered "low power" while power levels of 5000 hp to 7000 hp represented "high power". "Medium power" would be levels that fall between these extremes.

The application groups were organized as shown in Table 1 whereby no differentiation is made between stand-alone hybrid locomotives and hybrid locomotive consists.

Diesel	Electric			
	DC		AC	
	Low Power	Medium Power	Medium Power	High Power
Low Power	——	——	Switching railroads (3)	BC Rail (3)
Medium Power	Tunnel Operations (1)	Commuter (2)	Commuter Railroads (4)	Mainline Freight and Passenger (4)

Table 1

Application Groups for
Hybrid Locomotives/Consists.

It was determined that the impact of the AC power level on locomotive space and weight was not as important as the power size of the diesel engine required. The performance requirements on DC, however, were found to be very important to locomotive design. These considerations resulted in setting up the four main layout groups as numbered in the above table.

3. LOCOMOTIVE CONFIGURATIONS

3.1 Medium Power Diesel/Low Power DC

It is relatively simple to add suitable electrical equipment to a basic diesel-electric locomotive with DC traction in order to allow tunnel operations (application group no. 1) on a DC third rail. Figure 1 shows the minimum additional equipment required on a typical 4-axle diesel-electric locomotive equipped with mechanical auxiliary drives.

The DB grid resistors are reconfigured by a set of contactors to act as starting resistors for the traction motors in electric operation. A small locomotive battery-driven air compressor must be added to furnish compressed air if the engine is not allowed to run during tunnel operations. Power levels on DC operation may be so low and operating time so brief that cooling of the traction motors would not be required. A hybrid locomotive consist would not be required to accommodate the added locomotive electrical equipment, as it can all find a place on the basic diesel-electric locomotive.

Added performance requirements will result in additional equipment. Battery charging, for example, during 3rd rail operation without engine operation will require installation of a static converter or motor-generator set supplied from the electrification system.

Head-End Power (HEP) is a special problem for a hybrid locomotive. In diesel operation an auxiliary alternator is commonly used to supply 3-phase AC power at constant voltage and frequency to the train. Considerable complication is introduced if HEP must be maintained during 3rd rail operation. This is discussed in Section 3.2 below.

3.2 Medium Power Diesel/Medium Power DC

When smooth performance at a power level comparable to diesel traction is required during 3rd rail operation, the switched-resistor approach discussed above must be replaced by some form of traction power converter technology. With DC traction motors this would be a DC-DC converter (chopper) whereas with 3-phase AC traction motors, DC-AC converters (static inverters) would be required.

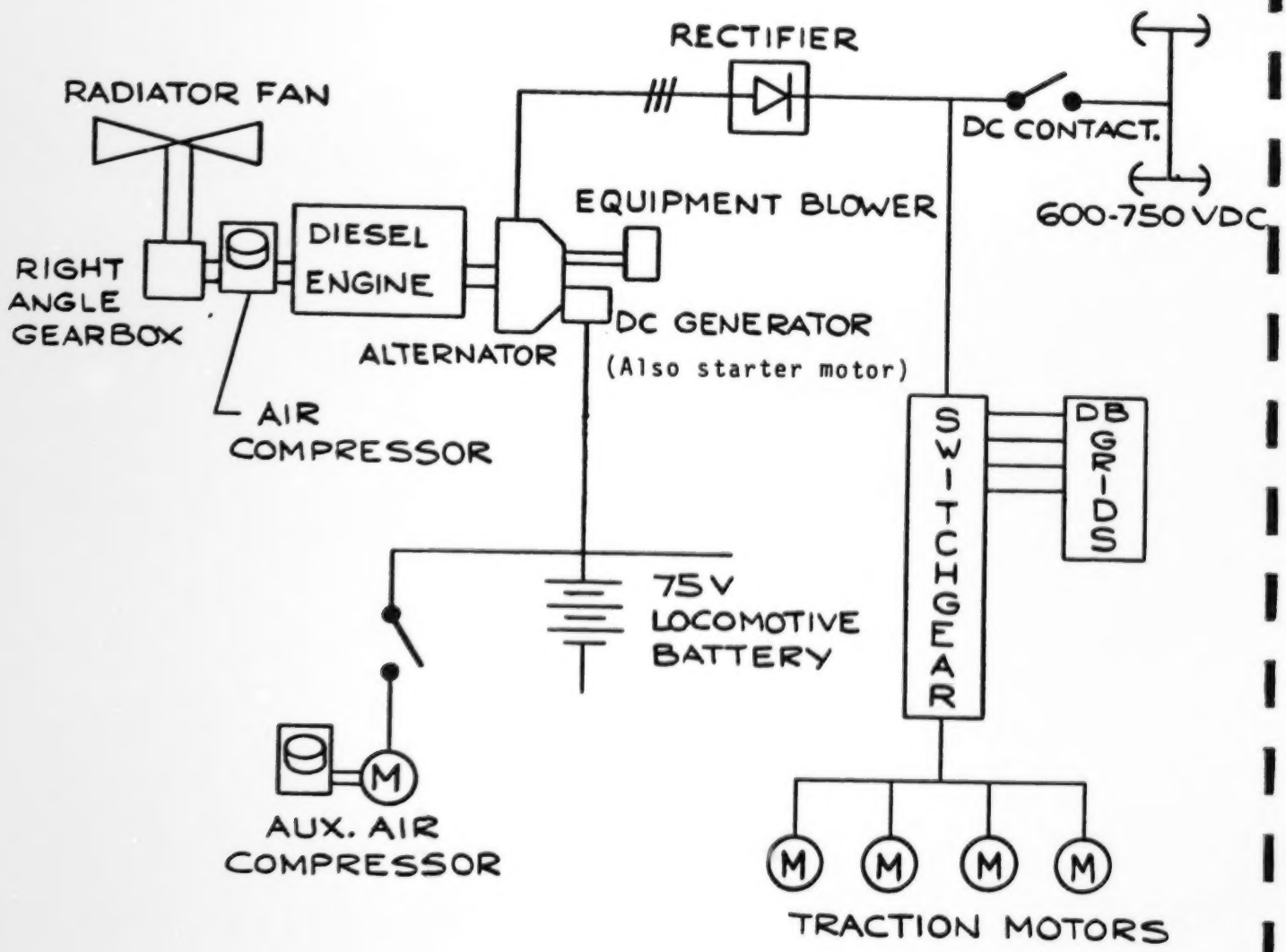

FIGURE 1

BLOCK DIAGRAM
LIMITED PERFORMANCE HYBRID LOCOMOTIVE
FOR 3RD RAIL OPERATION
DC TRACTION

Figure 2 shows one possible arrangement for use with DC traction motors. Traction power choppers supply the correct voltage and current values to the traction motors while compensating for the varying input voltage at the 3rd rail interface. The result is smooth acceleration and braking performance without the losses that arise in a switched resistor scheme. With some increase in complexity the chopper can be configured to allow regenerative braking.

It should be realized that existing diesel-electric locomotive traction motors will require a terminal voltage of about 1200V-1400V at high locomotive speeds. The alternator is designed such that its rectified output can reach this voltage level. Since 3rd rail voltage is only about 600 to 750V the chopper must either be configured as a "step-up chopper" in order to maintain motor current and hence tractive effort at high locomotive speeds under 3rd rail operation or switchgear must be provided to give series/parallel switching when passing between diesel and 3rd rail modes.

Extensive, high-performance operations on 3rd rail will require cooling of the traction motors and power converters and operation of a standard-size air compressor. The mechanical drive configuration shown in Figure 1 is no longer suitable and must be replaced by electric motor drives, whereby either DC or 3-phase AC motors may be used.

The simplest solution is to use a series-wound DC motor operating from both the rectified main alternator output and the 3rd rail supply.

If HEP is required, one possible arrangement to drive an auxiliary alternator on one end by a through-shaft of the main alternator and on the other by a DC motor for 3rd rail operation. Since decoupling clutches would be required on both ends of the alternator the overall configuration consumes considerable locomotive length. For this reason the system shown in Figure 2 uses a separate M/A set, which can be arranged laterally on the locomotive. In the configuration shown the locomotive auxiliary motors are 3-phase AC and are also connected to the auxiliary alternator.

Complete elimination of DC motors (with the possible exception of the DB blower drive) can be realized by the electrical configuration shown in Figure 3. Inverters are used to supply both traction and auxiliary loads. With traction motors and alternator designed for an intermediate voltage in the 1000V range, inverter power output will be reduced when operating from the 3rd rail. Force-commutated inverters, in particular, will only produce a small fraction of their rated power under these circumstances, which will result in very degraded traction and auxiliary power system performance in the electric mode. Transistor or Gate-Turn-Off (GTO) thyristor inverters will degrade much less than conventional thyristor inverters. The latter will probably require step-up choppers in order to deliver satisfactory levels of performance.

In order to study the implementation of 3-phase AC traction in a hybrid locomotive for application group no.2 a series of locomotive layouts was produced. Figure 4 shows essentially the HR 616 Bombardier locomotive outfitted with 3-phase AC traction and auxiliary power systems based on conventional thyristor air-cooled inverters. Mechanically-driven radiator fans, blowers, and compressor, as now used on this locomotive, have been replaced by electric motor drives. No step-up choppers have been provided in this layout and it can be expected that this locomotive would be capable of full performance only in diesel mode. If full performance in electric mode is desired step-up choppers would be required in number and size approximately equal to the complement of inverters. The inclusion of these additional components would be very difficult even on this large Co-Co locomotive.

A Bo-Bo locomotive layout using the same equipment complement as above was also generated (Figure 5). The unit has a single "Euro" cab placed at the extreme leading end of the locomotive and the toilet moved to a position behind the electronics cabinet. Transverse passage through the locomotive is now through the cab. This would be, in general, a suitable configuration for Metro-North. Even without a detailed weight analysis, however, it was realized that a serious weight problem would exist with the unit if conventional construction techniques were used (steel hoods, underslung fuel tank, etc).

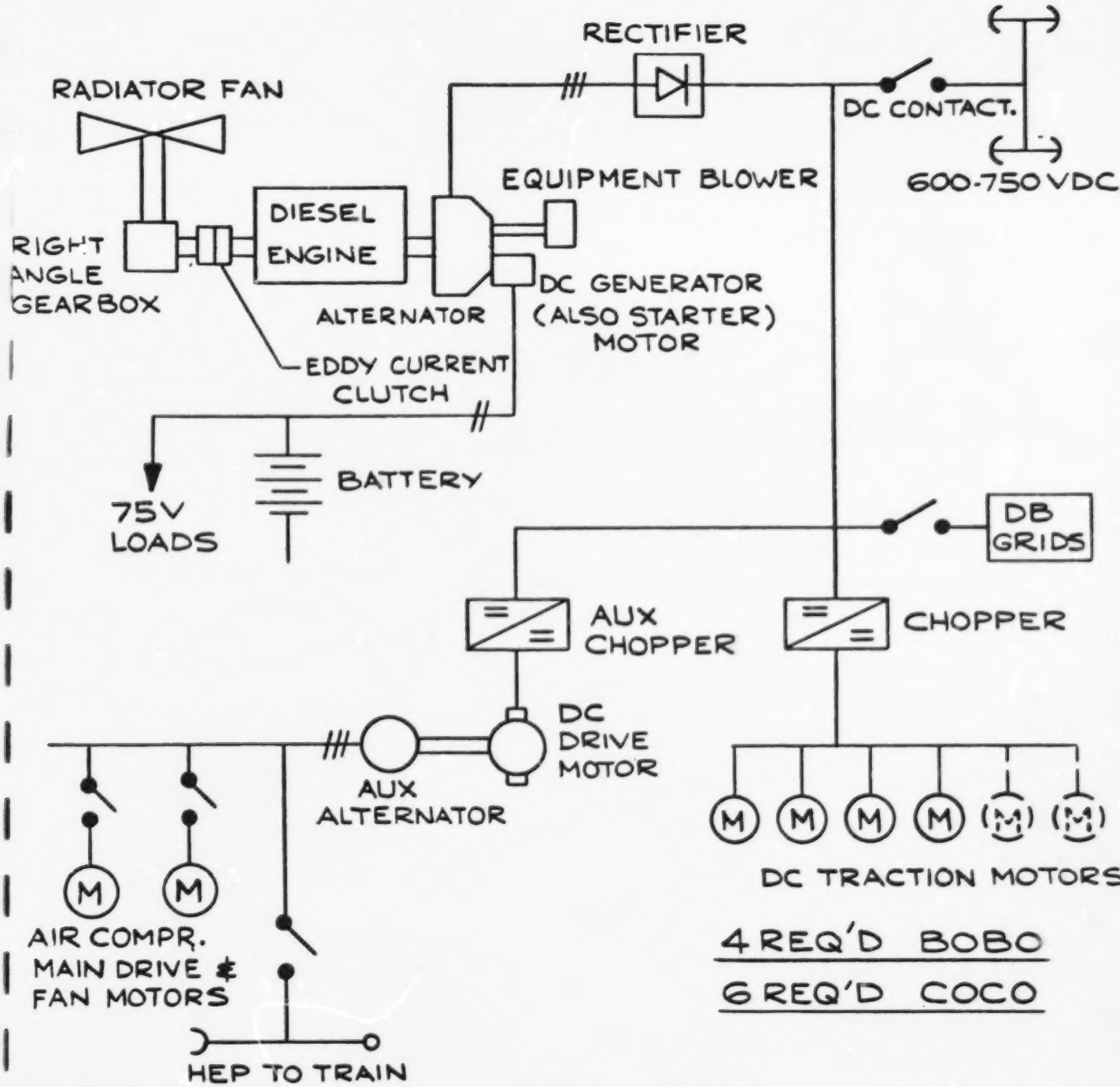

FIGURE 2

BLOCK DIAGRAM
ELECTRICAL SYSTEM HYBRID
DIESEL/3RD RAIL LOCOMOTIVE
DC TRACTION

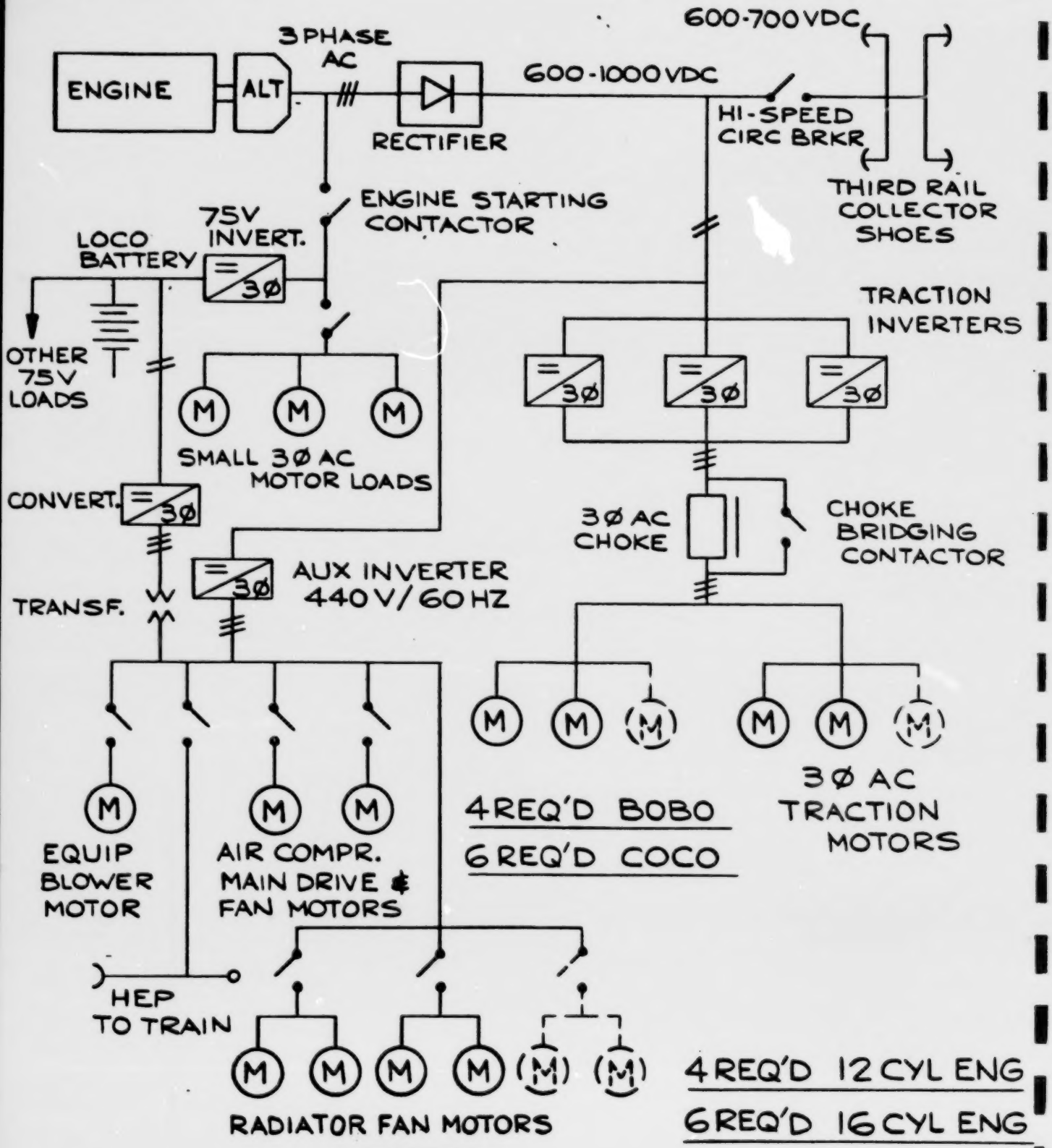

FIGURE 3

BLOCK DIAGRAM

ELECTRICAL SYSTEM HYBRID
DIESEL / 3RD RAIL LOCOMOTIVE
3Ø AC TRACTION

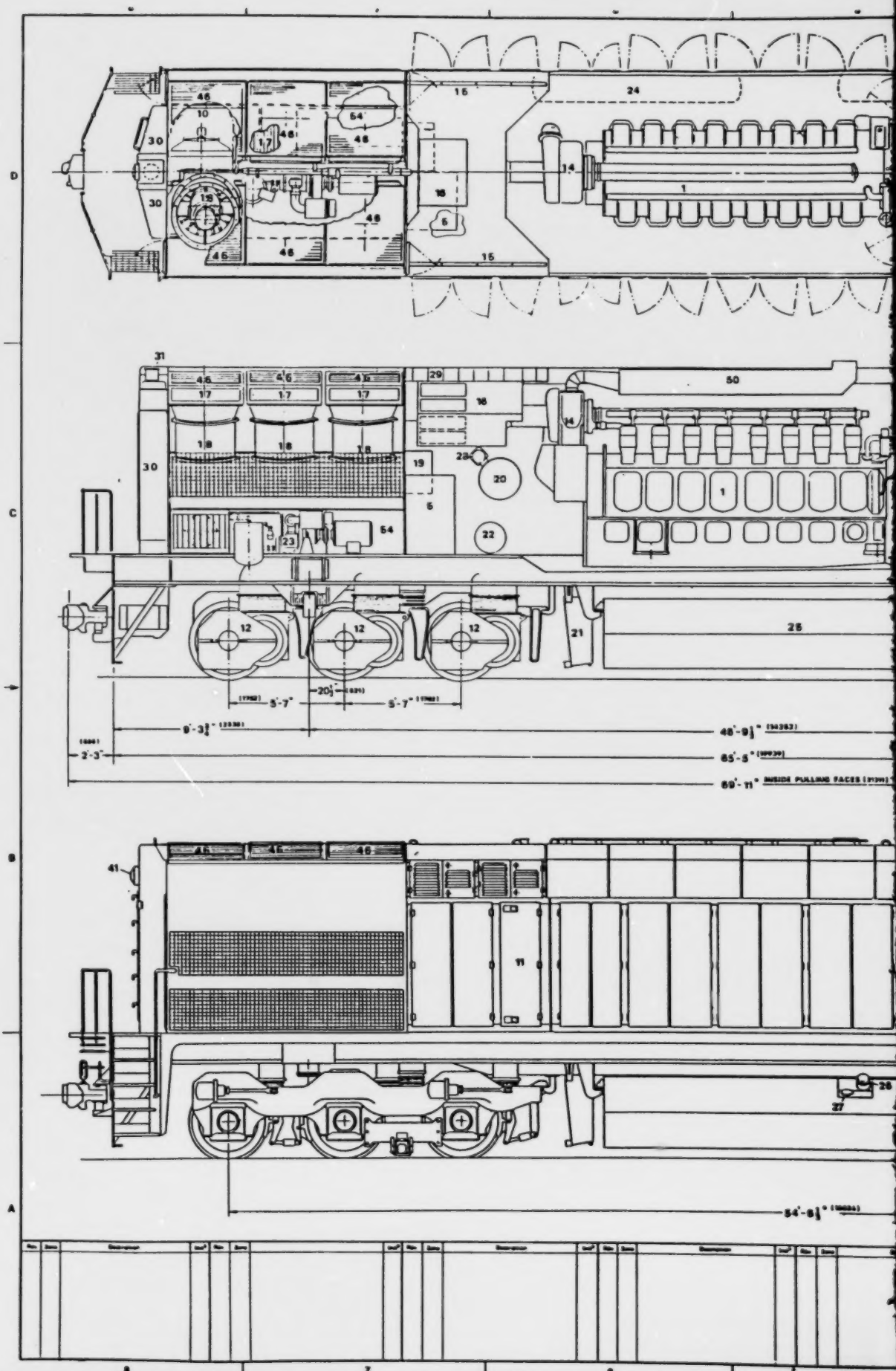

D
C
B
A
5'-7"
5'-7"
2'-3"
48'-9½"
65'-5"
69'-11" INSIDE PULLING FACES
54'-8½"

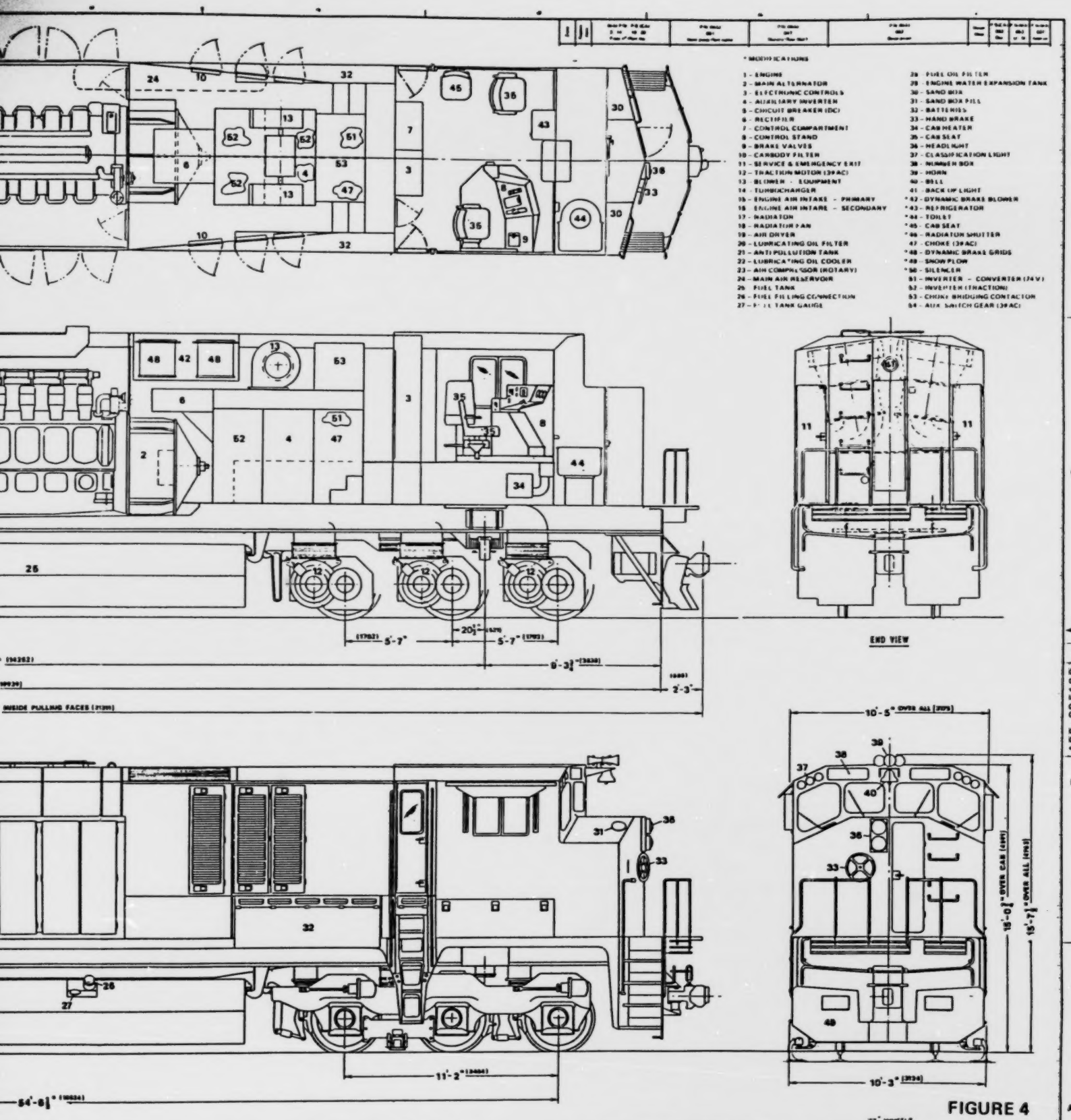

FIGURE 4

42" WHEELS

Bombardier Inc.
Division des produits ferroviaires et diesel
Rail and Diesel Products Division
Montreal Quebec, Canada

GENERAL ARRG'T
Co-Co, FULL WIDTH HOOD, SINGLE CAB
3φAC THIRD RAIL, AIR COOLED INVERTERS

AO

1/1 A98-095180-000

A98-095180

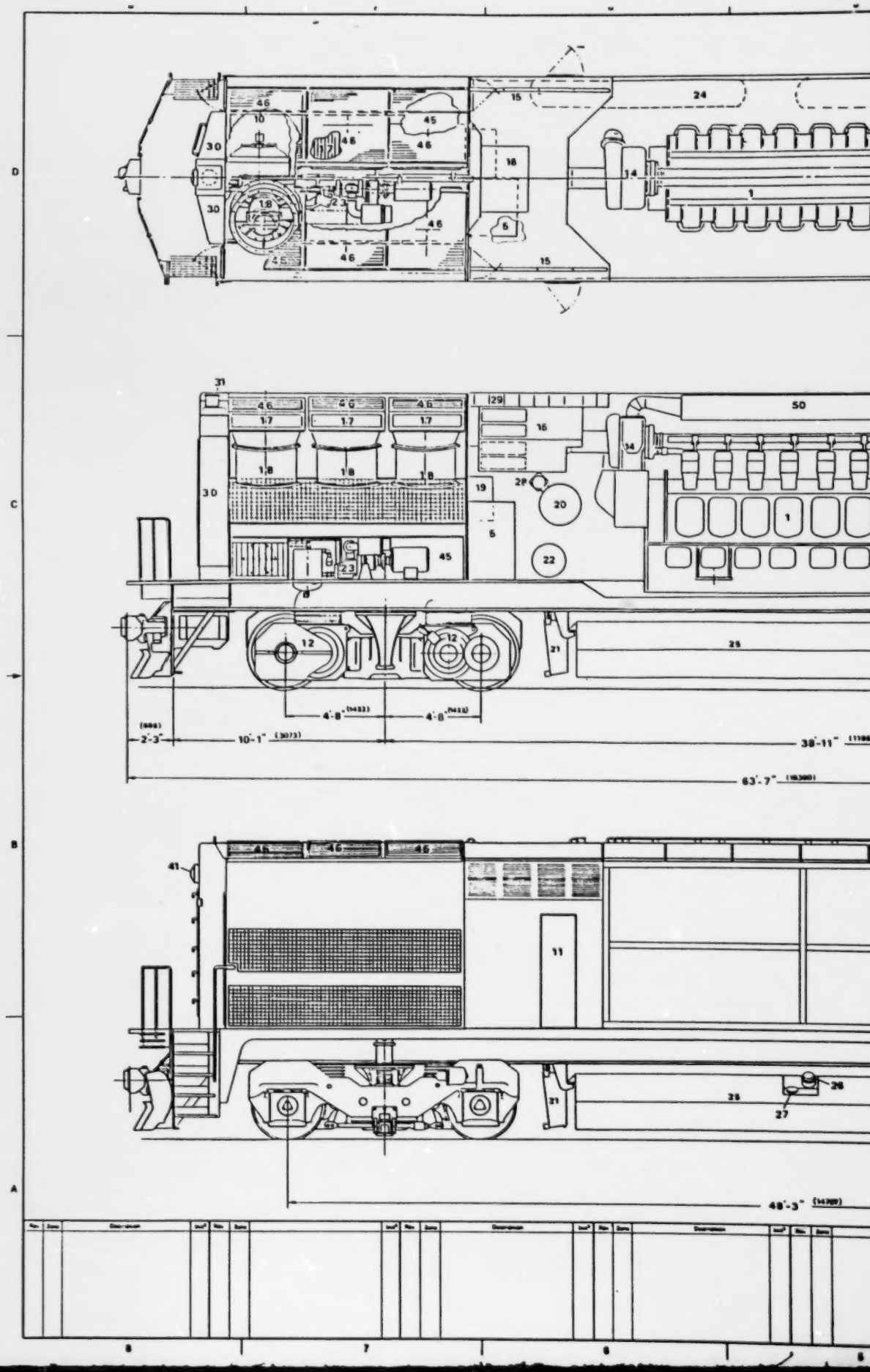

D
C
B
A
46
10
30
45
15
24
18
14
1
5
31
29
50
17
19
28
20
22
23
12
21
25
4'-8"
2'-3"
10'-1"
38'-11"
63'-7"
41
11
26
27
48'-3"

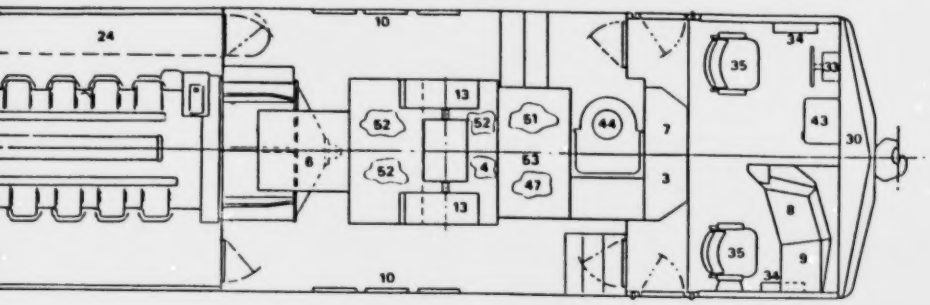

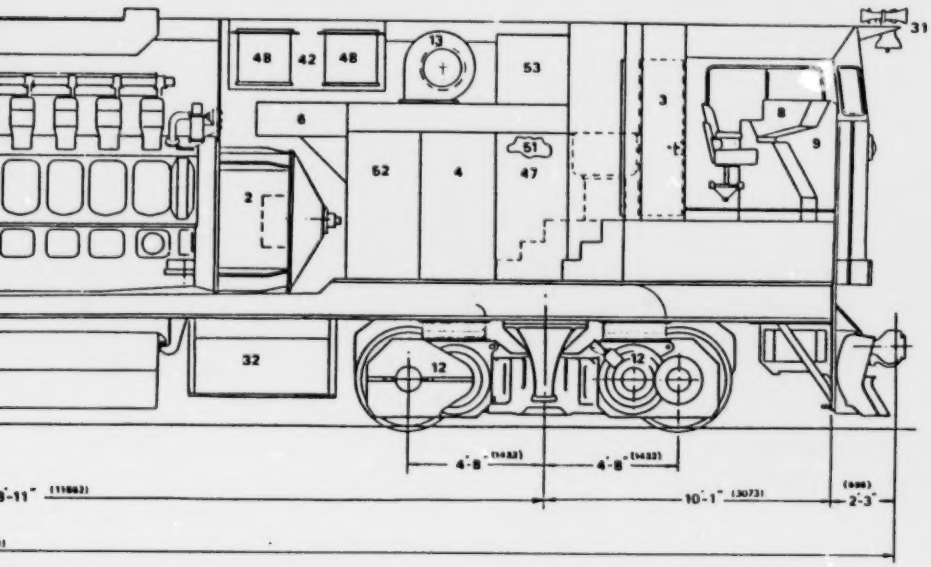

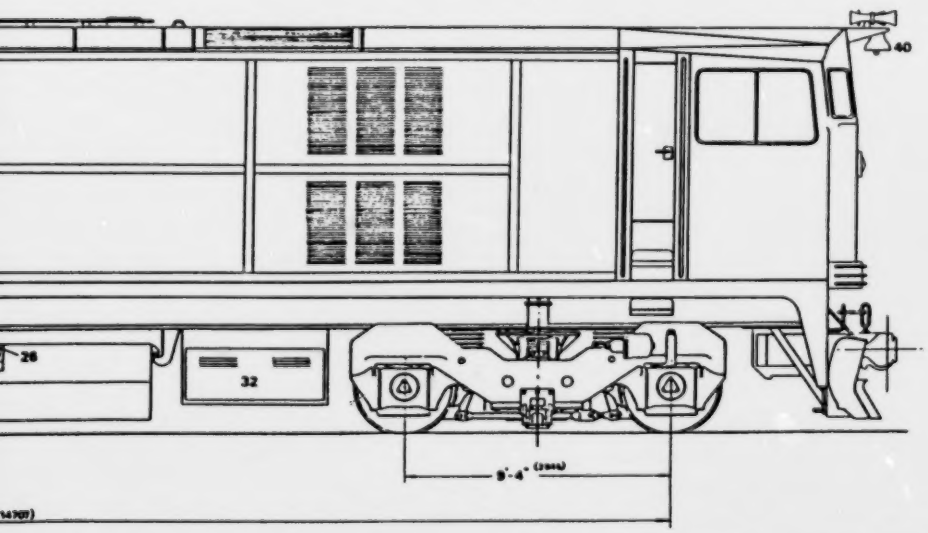

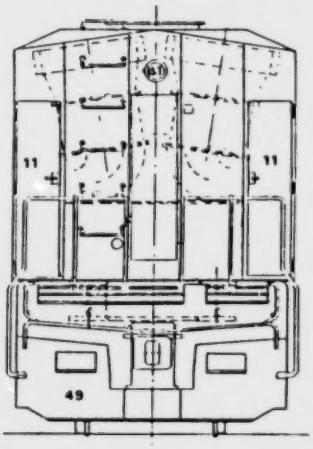

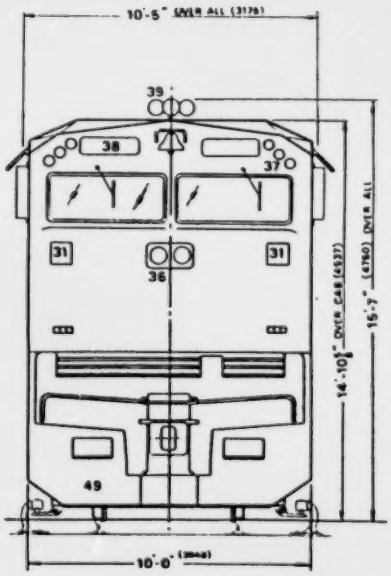

* MODIFICATIONS

1 - ENGINE
2 - MAIN ALTERNATOR
3 - ELECTRONIC CONTROLS
4 - AUXILIARY INVERTER
5 - CIRCUIT BREAKER (DC)
6 - RECTIFIER
7 - CONTROL COMPARTMENT
8 - CONTROL STAND
9 - BRAKE VALVES
10 - CARBODY FILTER
11 - SERVICE & EMERGENCY EXIT
12 - TRACTION MOTOR (3PAC)
13 - BLOWER EQUIPMENT
14 - TURBOCHARGER
15 - ENGINE AIR INTAKE PRIMARY
16 - ENGINE AIR INTAKE SECONDARY
17 - RADIATOR
18 - RADIATOR FAN
19 - AIR DRYER
20 - LUBRICATING OIL FILTER
21 - ANTI POLLUTION TANK
22 - LUBRICATING OIL COOLER
23 - AIR COMPRESSOR
24 - MAIN AIR RESERVOIR
25 - FUEL TANK
26 - FUEL FILLING CONNECTION
27 - FUEL TANK GAUGE
28 - FUEL OIL FILTER
29 - ENGINE WATER EXPANSION TANK
30 - SAND BOX
31 - SAND BOX FILL
32 - BATTERIES
33 - HAND BRAKE
34 - CAB HEATER
35 - CAB SEAT
36 - HEADLIGHT
37 - CLASSIFICATION LIGHT
38 - NUMBER BOX
39 - HORN
40 - BELL
41 - BACK UP LIGHT
* 42 - DYNAMIC BRAKE BLOWER
* 43 - REFRIGERATOR
* 44 - TOILET
45 - AUX SWITCH GEAR (3PAC)
* 46 - RADIATOR SHUTTER
47 - CHOKE (3PAC)
* 48 - DYNAMIC BRAKE GRIDS
* 49 - SNOW PLOW
* 50 - SILENCER
51 - INVERTER CONVERTER (74 V)
52 - INVERTER (TRACTION)
53 - CHOKE BRIDGING CONTACTOR

FIGURE 5

Bombardier Inc.
Division des produits ferroviaires et diesel
Rail and Diesel Products Division
Montréal Québec Canada

GENERAL ARRG'T.
Bo-Bo FULL WIDTH HOOD SINGLE CAB 'EURO'
3PAC THIRD RAIL AIR COOLED INVERTERS

AO

439299

1/1

A98-095200-000

A detailed layout study and weight analysis would be required to determine if construction techniques as used on the VIA Light Rapid Comfortable (LRC) locomotives would bring the unit weight to a level consistent with Metro-North requirements (approximately 107 tons for a Bo-Bo 63 ft long locomotive).

It is more probable that the 16 cylinder engine would have to be replaced by a 12 cylinder configuration as currently being developed by Bombardier and a number of other engine builders. These new engines deliver almost the same traction hp as the larger engines they are designed to replace.

The performance problem discussed above in conjunction with 3rd rail operation must also be addressed. If equal performance is required in 3rd rail and diesel operation clearly no space is available for "step-up" choppers. Instead the inverters must be replaced by transistor or GTO-based designs capable of maintaining tractive effort (and hence acceleration rate) with the reduced voltage available in 3rd rail operation. The speed at which tractive effort begins to fall off rapidly (and, of course, the balancing speed with the train load) will be less on 3rd rail operation but this may be acceptable to the operator. A Bo-Bo locomotive outfitted with freon-cooled GTO inverters is shown in Figure 6. The inverters shown are prototypes at the power level required and are not yet available commercially.

If the GTO or transistor inverters can be operated at a higher frequency it might be possible to reduce or eliminate the smoothing choke associated with conventional thyristor inverters. The absence of the choke and its shorting contactor would simplfy the layout considerably.

3.3 Low Power Diesel/High Power A.C.

Railroad-type diesel engines require a considerable space both for themselves and their auxiliary systems on a locomotive. Table 2 shows the dimensions of Bombardier type 251 engines.

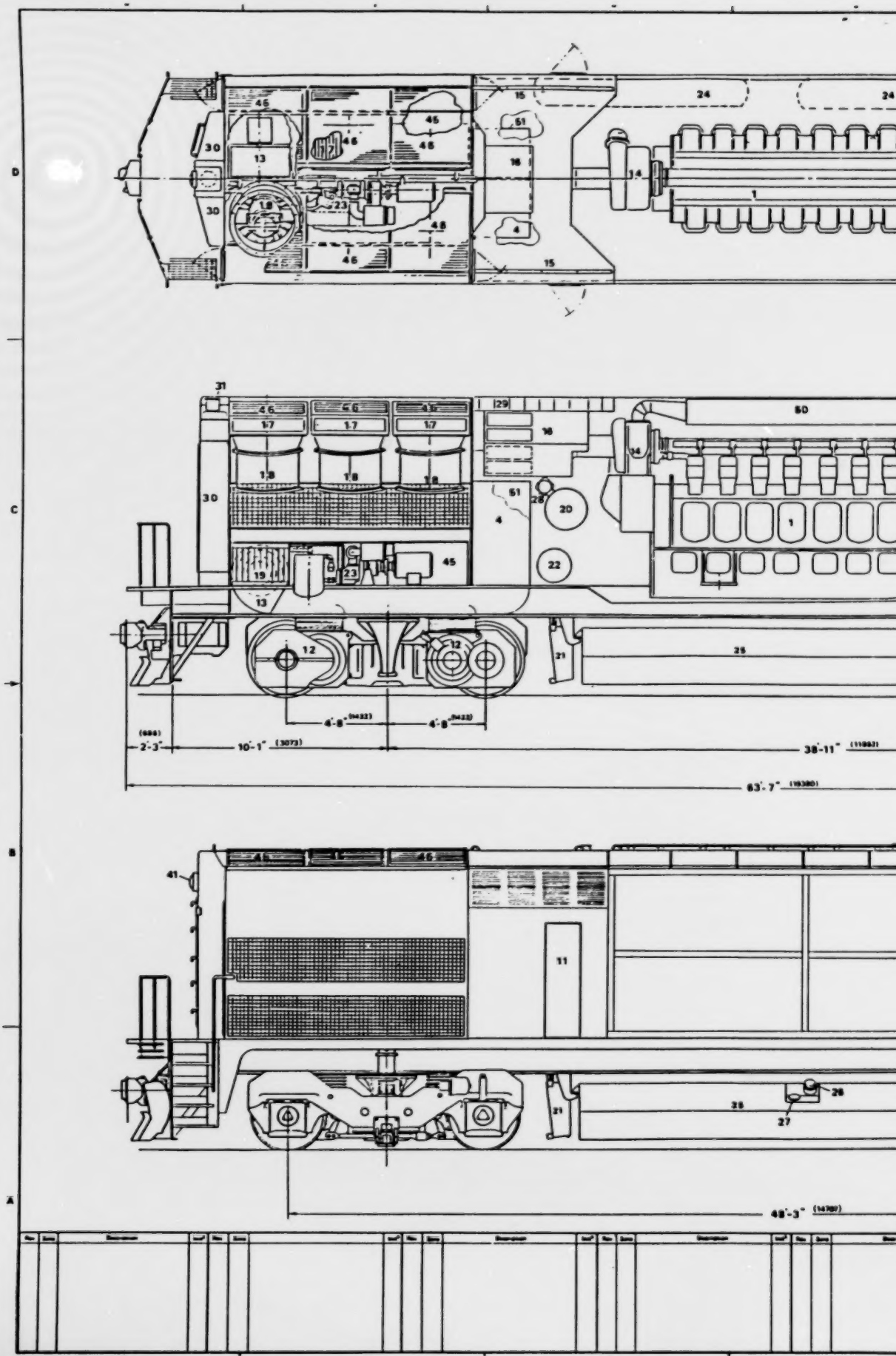
D
C
B
A
2'-3'
10'-1"
4'-8"
4'-8"
38'-11"
63'-7"
48'-3"

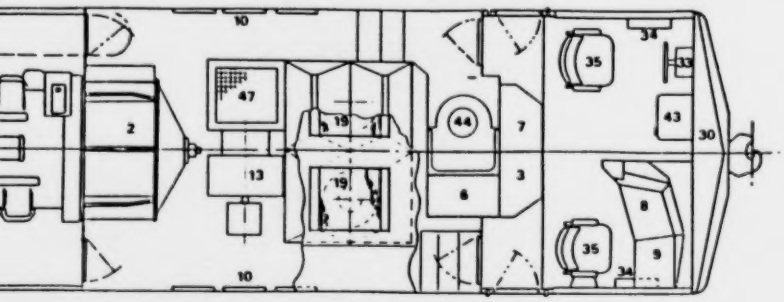

* MODIFICATIONS

1 ENGINE
2 MAIN ALTERNATOR
3 ELECTRONIC CONTROLS
4 AUXILIARY INVERTER
5 CIRCUIT BREAKER (DC)
6 RECTIFIER
7 CONTROL COMPARTMENT
8 CONTROL STAND
9 BRAKE VALVES
10 CARBODY FILTER
11 SERVICE & EMERGENCY EXIT
12 TRACTION MOTOR (3PAC)
13 BLOWER EQUIPMENT
14 TURBOCHARGER
15 ENGINE AIR INTAKE - PRIMARY
16 ENGINE AIR INTAKE - SECONDARY
17 RADIATOR
18 RADIATOR FAN
19 HEAT EXCHANGER
20 LUBRICATING OIL FILTER
21 ANTI POLLUTION TANK
22 LUBRICATING OIL COOLER
23 AIR COMPRESSOR
24 MAIN AIR RESERVOIR
25 FUEL TANK
26 FUEL FILLING CONNECTION
27 FUEL TANK GAUGE
28 FUEL OIL FILTER
29 ENGINE WATER EXPANSION TANK
30 SAND BOX
31 SAND BOX FILL
32 BATTERIES
33 HAND BRAKE
34 CAB HEATER
35 CAB SEAT
36 HEADLIGHT
37 CLASSIFICATION LIGHT
38 NUMBER BOX
39 HORN
40 BELL
41 BACK UP LIGHT
* 42 DYNAMIC BRAKE BLOWER
* 43 REFRIGERATOR
* 44 TOILET
45 AUX SWITCH GEAR (3PAC)
* 46 RADIATOR SHUTTER
47 CHOKE (3PAC)
* 48 DYNAMIC BRAKE GRIDS
* 49 SNOW PLOW
* 50 SILENCER
51 INVERTER CONVERTER (24 V)
52 INVERTER (THALTHAI)
53 CIRCUIT CAPACITOR

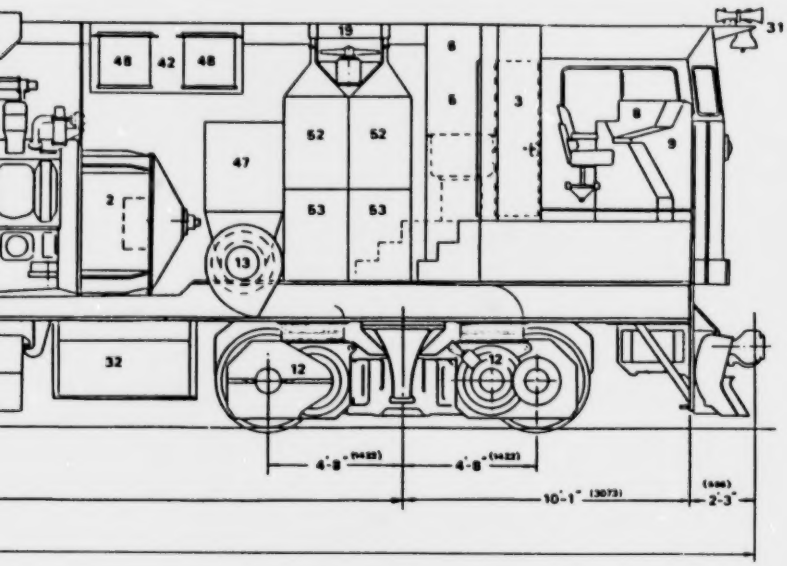

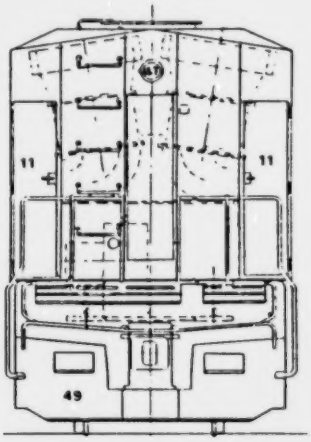

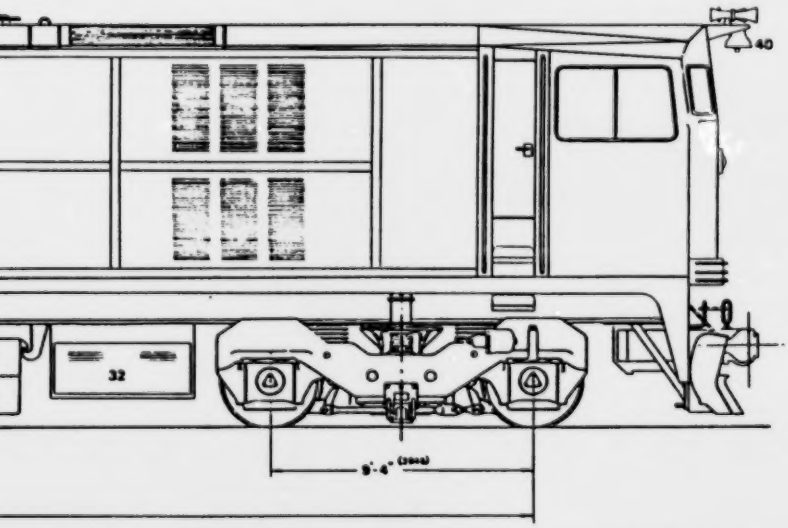

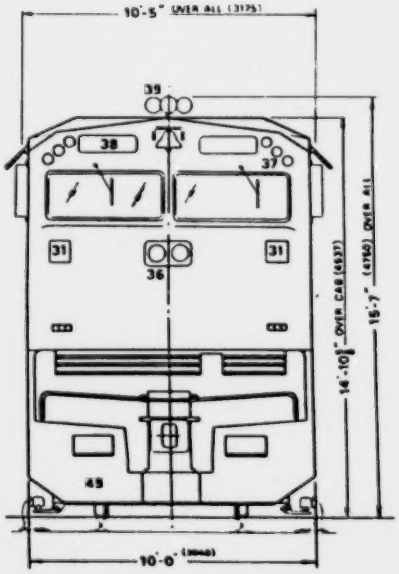

FIGURE 6

RD
Dec 24 MAR 86

PROJECTION

THE DRAWING AT HAND IS SUBMITTED SOLE INDEMNITY CONTRACT

DECIMAL

MATERIAL
FINISH (MACH)
DECIMAL

FINISH GROUP

ANGLES ±1/2° SHARP BREAKS ±1°

REMOVE 100 - 0 mm BURR

Bombardier Inc.
Bombardier products formerly Montreal Rail and Diesel Products Division
Montreal Quebec Canada

GENERAL ARRG'T.

Bo-Bo FULL WIDTH HOOD SINGLE CAB "BURO"
3 PAC THIRD RAIL FROM CONVERTER INVERTER

AO

439290

1/1

A98-095190-000

Engine	Length (in)	Width (in)	Height (in)
6 Cyl. (in-line)	157.5	65.6	88.6
V8	139.5	60.7	94.8
V12	178.6	61.8	103.8
V16	215	61.8	103.8

TABLE 2

Dimensions of Bombardier Type 251 Engines

Because of the need to access the engine from both sides no other major equipment can be placed alongside the engine. The height and heat output of the engine also effectively eliminates any possibility of equipment installation (except for the silencer) above the engine. The engine essentially monopolizes a length of 139.5 to 215 in on the locomotive depending on the number of cylinders. It should be noted that the locomotive length requirements of the engines do not follow a linear relationship, - a situation that also applies for the engine auxiliary systems (oil, water, and fuel) and alternator. This means that only moderate installation length is gained by going from a high-hp diesel engine to a lower-powered engine of the same type.

Based on this realization it was decided to proceed with a layout work for both application groups (3) and (4) on an "average" engine outfitted with 12 cylinders. Since the locomotive configurations involving low power diesel engines (6 or 8 cylinders) can be derived from this configuration as need arises it was not separately addressed in this study.

3.4 Medium Power Diesel/High Power A.C.

Application group (4) requires provision of a 12 or 16 cylinder diesel engine together with high voltage AC power conversion equipment. If this equipment is distributed in a consist comprised of two or more locomotives installation problems are minimal. Installation, however, of all equipment in a single locomotive frame is known to be very difficult and was consequently studied as an important part of this project.

The starting point for single locomotive designs was selected to be a Co-Co unit with full AC power and medium power diesel capability as shown in Figure 7. The high voltage AC equipment chosen was of the oil-cooled, DC traction type rated for 6000 diesel-equivalent hp as described in Reference 2.

As discussed above a 12 cylinder engine was selected for installation studies since it represents a compromise between the requirements of application groups (3) and (4). The techniques developed can be extended to the 16 cylinder engine for Co-Co hybrid mainline freight locomotives and, with cab and hood changes, to Co-Co commuter and mainline passenger locomotives. Locomotive layouts for switching railroad applications requiring 6 or 8 cylinder engines on either Bo-Bo or Co-Co frame can also be derived from this initial configuration. Bo-Bo wide hood units with 12 cylinder engines, as may be desired by commuter railroads, may also be generated using the initial configuration as a starting point.

The concept developed for incorporating all the required equipment into a standard-length locomotive frame is based on maximizing the sharing of equipment between the two modes. In addition, equipment is stacked wherever possible vertically and side-by-side in order to save length. The radiator cooling stacks serve to cool engine water when the locomotive is running in diesel-electric mode. In electric mode the same stacks cool the oil in the transformer and power converter heat exchangers. The compressor oil-to-air heat exchanger is also placed in one of the cooling stacks.

The traction motors may be of the series winding type as is common on all N. American diesel-electric locomotive and some electric locomotives or the shunt winding type as applied on other N. American electric locomotives. The configuration shown in Figure 8 is based on shunt motors whereby the armature and fields are separately controlled by associated power converters.

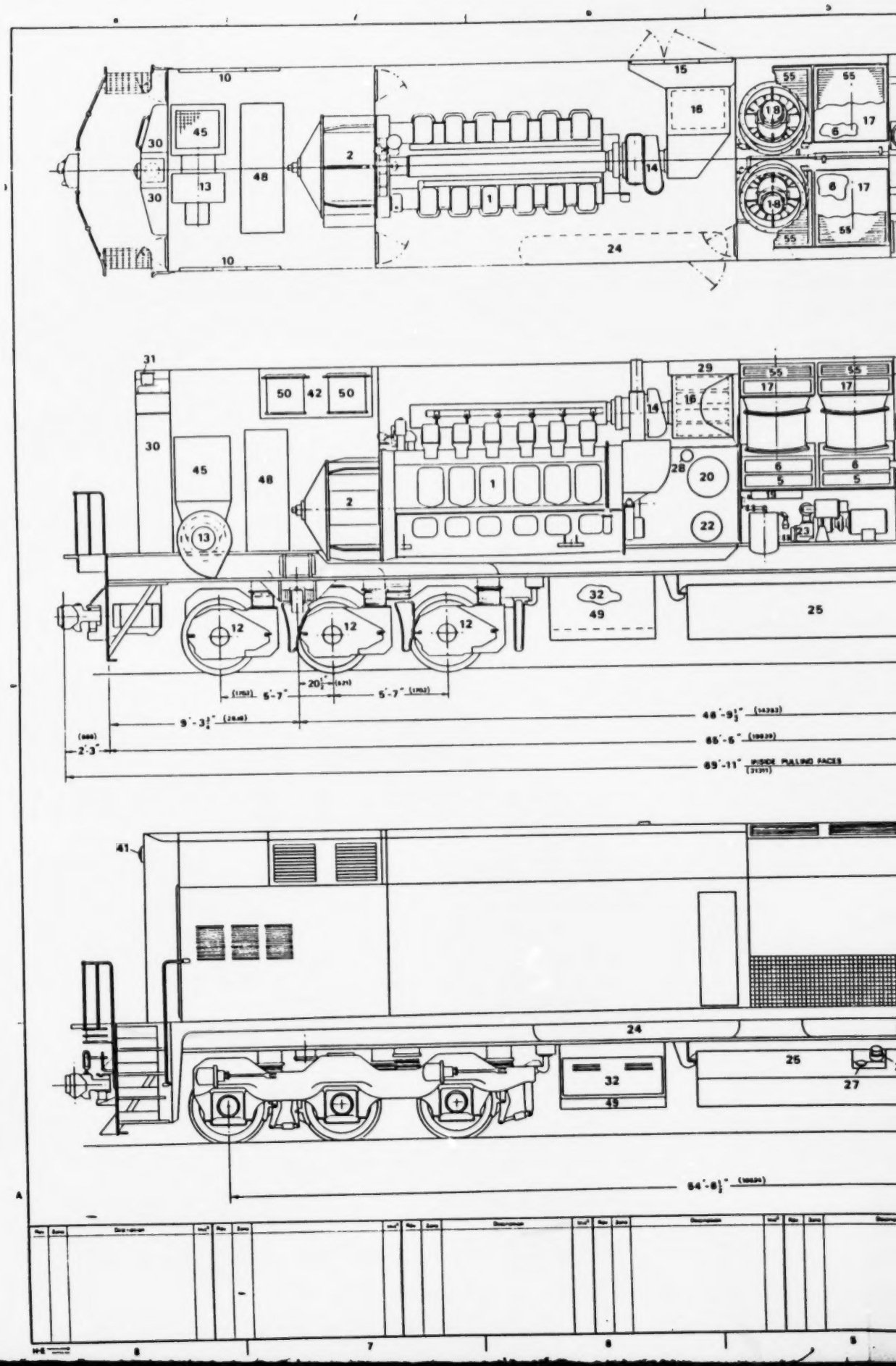

10
15
55
55
16
18
17
6
30
45
2
48
13
14
1
18
6
17
30
55
55
24
10
31
29
55
55
50
42
50
17
17
16
14
30
45
48
28
20
6
6
5
5
2
1
19
13
22
23
32
49
25
12
12
12
5'-7"
20½"
5'-7"
9'-3¾"
48'-9½"
65'-5"
2'-3"
69'-11" INSIDE PULLING FACES
41
24
25
32
27
49
54'-8½"

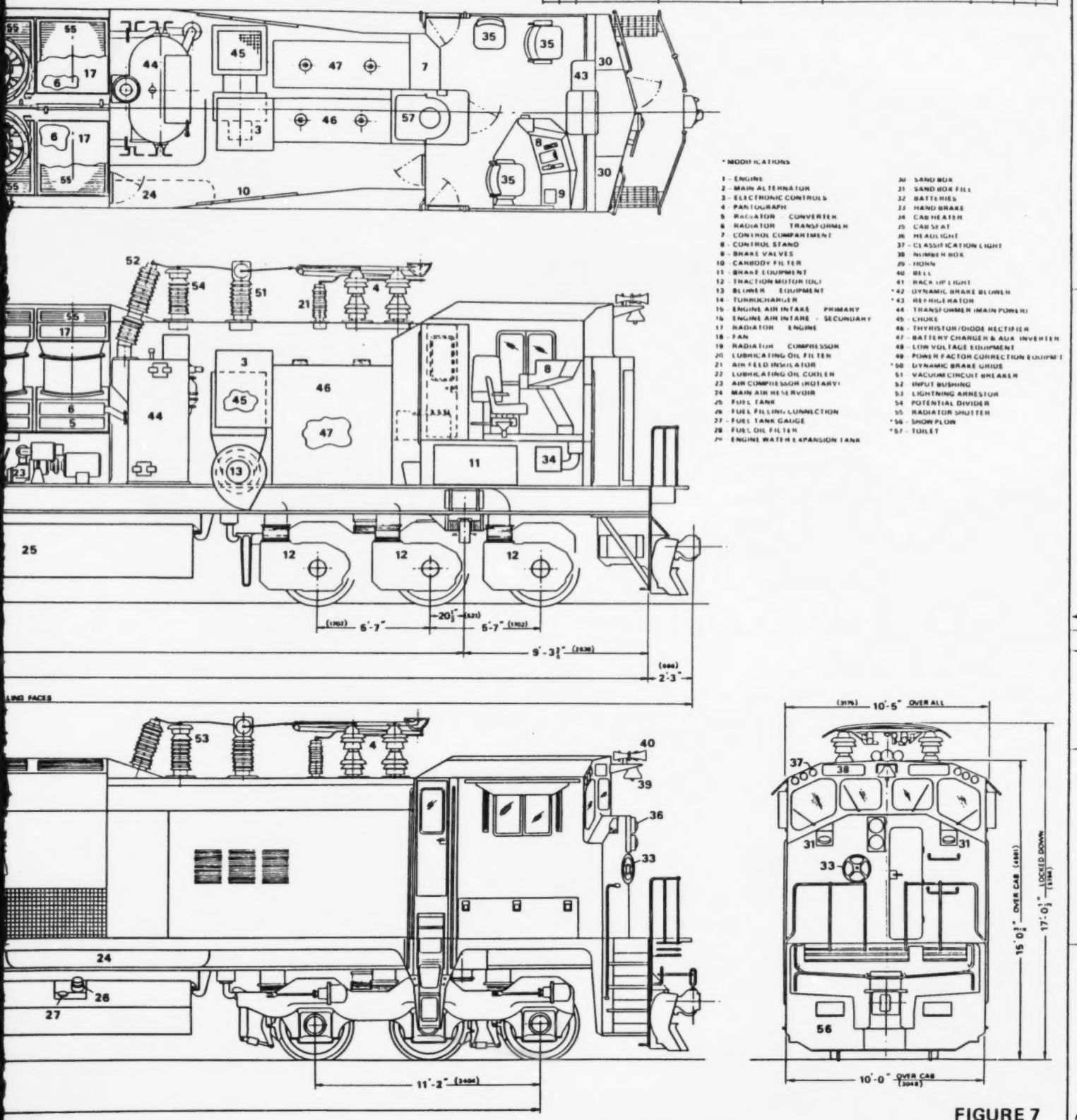

FIGURE 7

Bombardier Inc.
Division des produits ferroviaires et diesel
Rail and Diesel Products Division
Montréal Québec Canada

GENERAL ARRG'T.
ELECTRIC/DIESEL-ELECTRIC LOCO
Co-Co SINGLE 'CN' CAB DC MOTORS

AO
438299
1/1
A98-095220-000

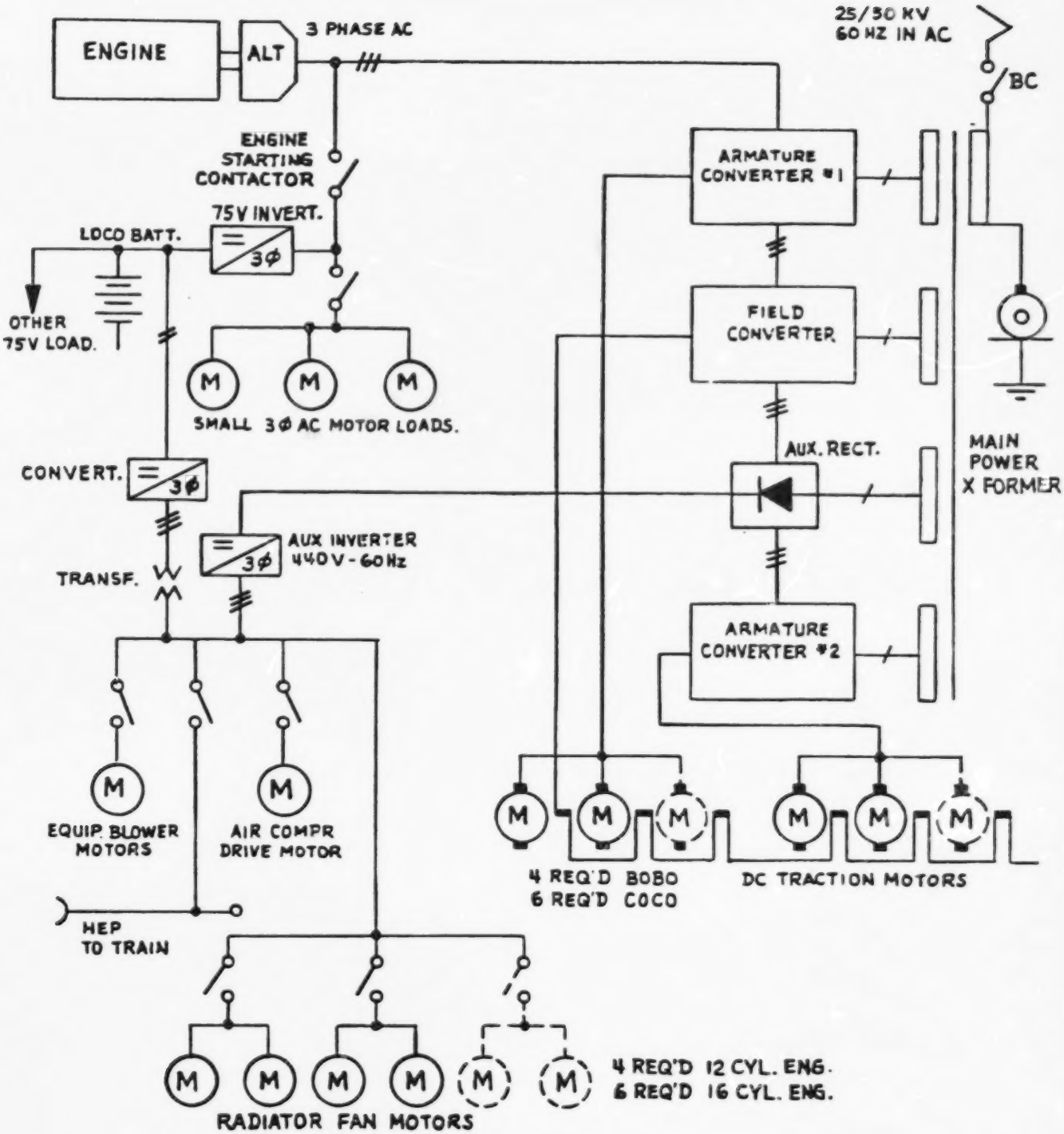

BLOCK DIAGRAM
ELECTRICAL SYSTEM HYBRID DIESEL/HV AC LOCOMOTIVE
DC TRACTION.

FIGURE 8

The traction power converter is used in both electric and diesel-electric operation. In electric mode it functions as a phase-controlled rectifier acting on the single phase 60 Hz AC input. Non-loadbreaking transfer switches can be provided in the converter to accept three phase AC power at variable frequency from the alternator in diesel-electric mode.

Similar transfer switches will be required in the auxiliary rectifier and field converter. Although it is easy to visualize the connection and functioning of transfer switches in the traction converter and other equipment the impact of such additional equipment on weight and dimensions is unknown and would have to be addressed in a more detailed locomotive design.

The use of transfer switches limits the locomotive to using either electrification or engine power at a given time. Use of both simultaneously, in order to limit current draw from the electrification system, reducing transformer size, etc., is possible if additional power semiconductor devices are included in converters and the auxiliary rectifier. Transfer switches would not be required in this case. Control complexity would be increased and research would be required in order to ensure system stability under varying line voltage and locomotive load conditions.

4. CONCLUSIONS AND RECOMMENDATIONS

Railroad electrification in North America is fragmented and characterized by different types and levels of voltage. Diesel powered locomotives have always been able to circulate freely over practically all trackage including electrified zones or divisions whereas straight electric locomotives which obtain their power from either an overhead catenary or a third rail are not able to provide traction in the absence of a wayside power source. This study provides some conceptual approaches toward combining the engine on-board power source with straight electric capabilities to form a dual-mode or hybrid locomotive. The many advantages of railroad electrification would be accessible to such a vehicle without the cost and time penalties that would normally be incurred in exchanging locomotives when the end of an electrified division is reached.

The study concluded that a small but potentially interesting market exists for the supply of hybrid locomotives in four distinct application groups. These application groups depend on the type of electrification voltage available (low voltage DC or high voltage AC) and power requirements in the electric and diesel modes resulting in widely different locomotive equipment layouts. Designs for a 16 cylinder diesel/600V DC hybrid using 3 phase AC traction and a 12 cylinder diesel/11 KV AC locomotive using conventional DC traction were generated in this study.

Existing 3 phase AC traction equipment limitations preclude obtaining full performance on third rail operation. The size and weight of traction equipment designed for operation from a high voltage AC catenary place a limit on the diesel engine power that can be installed. Both of these problems can be eliminated as progress is made in the development of electrical traction and auxiliary equipment. Preparations of more detailed designs and a meaningful cost analysis were deferred due to this equipment situation and a time constraint placed upon the completion of this project.

It is therefore recommended that future activities consist of regular monitoring of the advances anticipated from those directly involved in the development of electric traction and auxiliary equipment. Any significant breakthrough could then be used effectively in refinement of the conceptual designs which have resulted from the effort that has been expended thus far.

REFERENCES

1. Dual-Mode Locomotive System Engineering
   Volume 1 Summary Lawson, et. al.
   FRA/ORD-80182.1.

2. Electric Freight Locomotive Conceptual Design
   for the Transportation Development Centre.
   TP 6799E Dorosh, H. July 1985.